Secureair
Via Stroppiana, 15 - 10071 Borgaro torinese (Torino) Italy
Tel. +39 011 4502031 – Fax +39 011 47 03 927 - info@secureair.it - www.secureair.it

SEQ axial panel fans

Sectors Ventilation,

Applications Fix

Issues Heat, Fumes

COD: SEQ000000000000

Axial wall-mounted fans are ideal exhaust fans for applications where high air flow rates and installation with wall or panel mounting are needed. For example: ventilation of warehouses, gymnasiums, factories, parking lots, farms, cooling of electrical equipment, refrigeration equipment, etc.

Insight

SE● fans on panel are for professional use, characterized by versatility and quality of materials used with production. The fan includes a sturdy cast aluminum hub for attaching the blades, which are profiled by molding different materials, always having the objective of withstanding high working loads. The motor is built following international standards, thus ensuring long-term reliability.

Structure

- Square frame with large suction radius protected against weathering
- Impeller with high-performance airfoil blades made of high-strength technopolymer and cast aluminum hub
- Steel wire motor-side safety net protected against atmospheric agents, made according to UNI EN 294 standard
- Static and dynamic balancing according to UNI/ISO 1940/BS 6861 - 1ì standard
- Three-phase or single-phase asynchronous motor, EEF 1 and 2 efficiency, suitable for operation by speed regulation, IP 55 protection, class F insulation, S1 service, execution 5, conforms to IEC/ EEC specifications (UNEL-MEC)
- Air flow from motor to impeller
- Supply voltage available single-phase Volts 230 Hz 50 (adjustable with regulator) or three-phase Volts 230/400 Hz 50 (adjustable with inverter)

Accessories

- Accident-prevention mesh on indoor side
- Gravity shutter
- Spacer
- Single-phase speed regulator
- Inverter

Simple installation

1. Drill a circular hole with a diameter 50mm larger than the nominal diameter of the impeller
2. Fasten the fan using the 4 holes in the corners of the panel, with dowels or through screws

Full description in manual inside carton package

Superior quality

- 100% made in Italy
- CE certification according to machine dir
- Maintenance manual in Italian
- Italian warranty

MADE IN ITALY

Secureair
Via Stroppiana, 15 - 10071 Borgaro torinese (Torino) Italy
Tel. +39 011 4502031 – Fax +39 011 47 03 927 - info@secureair.it - www.secureair.it

Dimensions

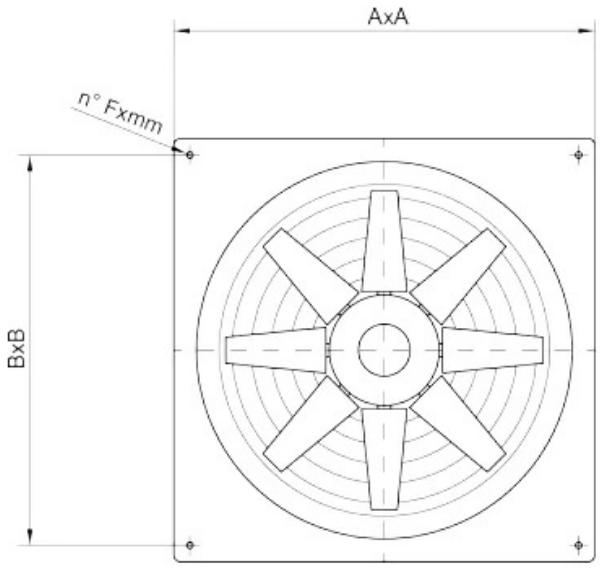

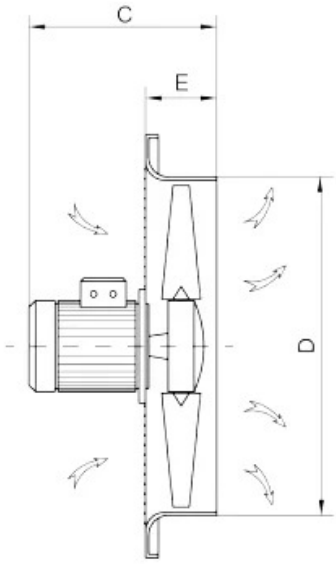

Code	C mm	D mm	E mm	AxA mm	BxB mm	no. Fxmm
SE●254M00000000	270	260	90	340	300	diameter 4x10
SE●314M00000000	320	310	110	390	350	diameter 4x10
SE●354M00000000	320	360	110	440	400	diameter 4x10
SE●404M00000000	320	410	110	500	450	diameter 4x10
SE●454M00000000	340	460	110	560	510	diameter 4x10
SE●504M00000000	365	510	110	650	580	diameter 4x10
SE●254T00000000	270	260	90	340	300	diameter 4x10
SE●314T00000000	320	310	110	390	350	diameter 4x10
SE●354T00000000	320	360	110	440	400	diameter 4x10
SE●404T00000000	320	410	110	500	450	diameter 4x10
SE●454T00000000	340	460	110	560	510	diameter 4x10
SE●504T00000000	365	510	110	650	580	diameter 4x10
SE●564T00000000	380	570	130	700	630	diameter 4x10
SE●506T00000000	365	510	110	650	580	diameter 4x10
SE●566T00000000	380	570	130	700	630	diameter 4x10
SE●636T00000000	400	640	130	800	730	diam. 4x12
SE●716T00000000	460	710	130	850	800	diam. 4x12

MADE IN ITALY

Secureair
Via Stroppiana, 15 - 10071 Borgaro torinese (Torino) Italy
Tel. +39 011 4502031 – Fax +39 011 47 03 927 - info@secureair.it - www.secureair.it

Technical Data

Code	Power kW	Nominal flow rate m3 / h	Liv son Db (A)	Power supply Hz	Motor	Voltage V	Poles
SE●254M00000000	0,04	1500	47	47	56A	220	4
SE●314M00000000	0,09	2480	50	52	56B	220	4
SE●354M00000000	0,12	3500	54	57	63A	220	4
SE●404M00000000	0,18	5250	59	62	63B	220	4
SE●454M00000000	0,25	6980	65	65	71A	220	4
SE●504M00000000	0,55	9000	66	69	80A	220	4
SE●254T00000000	0,04	1500	47	47	56A	400	4
SE●314T00000000	0,09	2480	50	52	56B	400	4
SE●354T00000000	0,12	3500	54	57	63A	400	4
SE●404T00000000	0,18	5250	59	62	63B	400	4
SE●454T00000000	0,25	6980	65	65	71A	400	4
SE●504T00000000	0,55	9000	66	69	80A	400	4
SE●564T00000000	0,75	13000	67	72	80B	400	4
SE●506T00000000	0,18	6200	55	59	71A	400	6
SE●566T00000000	0,25	8800	58	62	71B	400	6
SE●636T00000000	0,37	12400	63	66	80A	400	6
SE●716T00000000	0,75	16000	65	67	90S	400	6

MADE IN ITALY

Secureair
Via Stroppiana, 15 - 10071 Borgaro torinese (Torino) Italy
Tel. +39 011 4502031 – Fax +39 011 47 03 927 - info@secureair.it - www.secureair.it

Related accessories

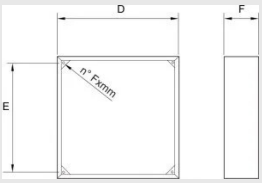

Spacer for fixing SE● fans on thin walls

DISSEQ000000000

Rectangular spacer for fixing on thin walls for SEQ model fans.

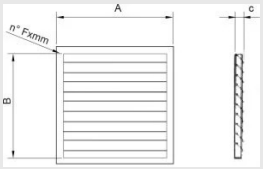

Gravity damper for SE● axial fans

SERSEQ000000000

The SEQ axial fan gravity damper prevents heat loss when the fan is stopped, rain, wind and bird entry.

TOSHIBA VFS15 Series 400V Three-Phase Inverter

IVTO154004PL1W0

Toshiba's range is differentiated in the market by reliability, technological innovation of the solutions adopted, and is designed to ensure the best performance in full compliance with international standards.

Single-phase speed controller for fans

REGVELMONO00000

Speed controll ers are ideal for controlling **single-phase motors of** axial or centrifugal **fans** , single or double inlet or box fans.

MADE IN ITALY

Secureair
Via Stroppiana, 15 - 10071 Borgaro torinese (Torino) Italy
Tel. +39 011 4502031 – Fax +39 011 47 03 927 - info@secureair.it - www.secureair.it

Related Products

ASTRA destratifier

ASTRA0000000000

ASTRA destratifiers **increase the efficiency of the heating system** by preventing the accumulation of warm air in the upper parts of buildings. The fan redirects heat downwards, thus reducing heat loss and preventing heat loss to the outside.
The result is rapid heating of the building, resulting in energy savings due to better overall system efficiency.

SE●A1400 High Flow Axial Fan

SEQA14000000000

High-flow axial fans suitable for wall or overhead installation to **create a uniform indoor climate and recirculate air in commercial and industrial buildings, farms, barns, and greenhouses**.

HVLS industrial 5-blade ceiling fan APBG5

SMHS00000000000

APBG5 5-Blade Industrial Ceiling Fan

- 5 Blades Extruded Aluminum Anodized Against Corrosion Constant Section
- Increased Air Distribution Cone
- Three-phase Brushless EC motor equipped with Integrated Electronic System and EMC filters
- 3 Sizes with Diameters 3.6m / 5.4m / 7.3m
- Air Flow Rates up to 438,818 m3/h (AMCA230-99)
- 110 RPM Max
- Pot. Max Ass. 0.75 kW

HVLS industrial 5-blade ceiling fan APBG5S

SWHS00000000000

HVLS Industrial 5-Blade Ceiling Fan APBG5S

- 5 Blades Extruded Aluminum Shaped Profile
- Narrow Cone Air Distribution
- Three-phase Brushless EC motor equipped with Integrated Electronic System and EMC filters 3
- Sizes with Diameters 4m / 5m / 6m
- Air Flow Rates up to 529,464 m3/h (AMCA230-99)
- 120 RPM Max
- Pot. Max Ass. 1.4 kW

MADE IN ITALY

- Suitable for continuous duty S1

Industrial 3-blade ceiling fan HVLS3

SLHS00000000000

HVLS 3-Blade Industrial Ceiling Fans.

- 3 Blades Extruded in Anodized Aluminum against Corrosion with Constant Cross Section
- Precabled 3-phase Brushless EC motor equipped with Integrated Electronic System and EMC3 filters
- Sizes with Diameters 2.4m / 3m / 3.6m
- Air Flow Rates up to 134,271 m3/h (AMCA230-99)200
- Max RPM
- Pot. Max Ass. 0.7 kW
- Suitable for continuous duty S1.

MADE IN ITALY