Secureair
Via Stroppiana, 15 - 10071 Borgaro torinese (Torino) Italy
Tel. +39 011 4502031 – Fax +39 011 47 03 927 - info@secureair.it - www.secureair.it

WFPN spray booth suction wall

Sectors Painting,

Applications Fix

Issues VOC fumes

COD:

WFPN00000000000

WFPN spray booths are equipped with integrated dry filtration and exhaust fan and due to their geometry form a constant speed suction front so as to capture pollutants produced by operations such as painting, resin coating, gluing and in all those professional treatments that generate application overspray.

Insight

WFPN version

This version comes complete with:

- 1400 RPM industrial vacuum cleaner
- Andreae® eff 98% cardboard inertial pre-filter
- Fiberglass paint-stop filters
- provision for activated carbon

Construction

Frame and panels are made of sturdy, high-grade galvanized sheet metal, machined with a numerically controlled punching machine and press-folded with a 6-axis computerized bending machine. There are no welds for maximum durability and reduction of corrosion phenomena. All panels are gasketed with silicone sealants and bolted together with high-strength bolts.

The wall enclosure forms a suction cabinet with the first suction veil inclined: this solution is designed to optimize suction over the entire front surface.

Practical application - expert's advice

The ideal use is wall-mounted installation of the cabin, resulting in the positioning of the operator and work area as close as possible to the suction front. Side extensions and roof are strongly recommended, so as to protect the application area from side drafts that would counteract the suction capacity of the suction booth wall.

Available accessories

- Ceiling lights
- Electrical cabinet
- Activated carbon in panels
- Exhaust silencer
- Piping and chimney
- Side wall and roof extensions
- ATEX zone 22 3D components

Other versions are also available complete with electrical panel, lighting ceiling lights and activated carbon, see reference category.

MADE IN ITALY

Secureair
Via Stroppiana, 15 - 10071 Borgaro torinese (Torino) Italy
Tel. +39 011 4502031 – Fax +39 011 47 03 927 - info@secureair.it - www.secureair.it

Example of paint booth installation with extensions and roof, in complete version with lights and switchboard

MADE IN ITALY

Secureair
Via Stroppiana, 15 - 10071 Borgaro torinese (Torino) Italy
Tel. +39 011 4502031 – Fax +39 011 47 03 927 - info@secureair.it - www.secureair.it

Dimensions

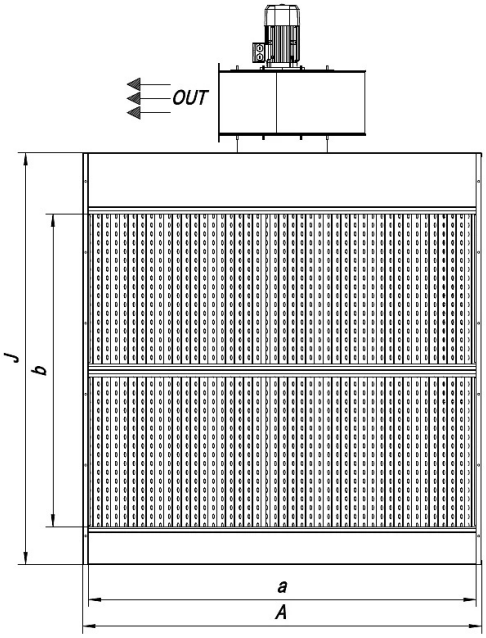

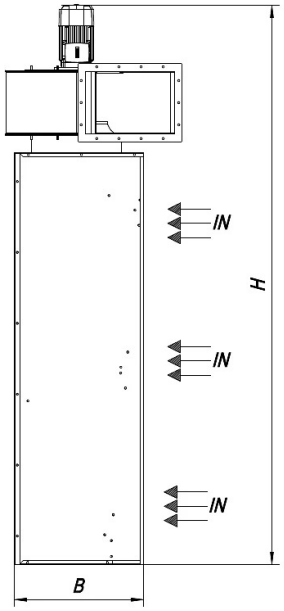

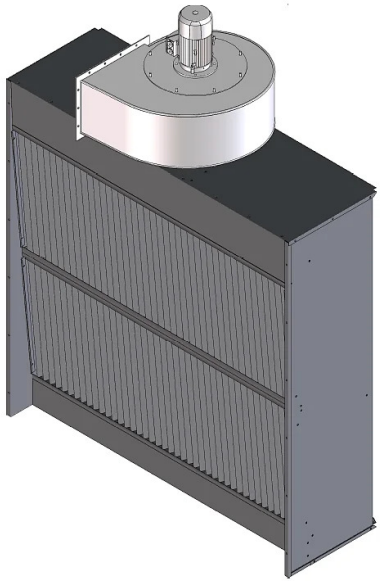

Code	A mm	a mm	B mm	b mm	H mm	j mm
WFPN20000000000	2250	2190	730	1840	3240	2320
WFPN30000000000	3150	3090	730	1840	3240	2320
WFPN40000000000	4050	3990	730	1840	3240	2320
WFPN50000000000	4950	4890	730	1840	3240	3220

MADE IN ITALY

Secureair
Via Stroppiana, 15 - 10071 Borgaro torinese (Torino) Italy
Tel. +39 011 4502031 – Fax +39 011 47 03 927 - info@secureair.it - www.secureair.it

Technical Data

Code	Power kW	Nominal flow rate m3 / h	Useful pressure Pa	Pipe diameter mm
WFPN20000000000	1,5	8000	300	500
WFPN30000000000	2,2	12000	300	630
WFPN40000000000	3	16000	300	710
WFPN50000000000	4	20000	300	810

MADE IN ITALY

Secureair
Via Stroppiana, 15 - 10071 Borgaro torinese (Torino) Italy
Tel. +39 011 4502031 – Fax +39 011 47 03 927 - info@secureair.it - www.secureair.it

Technical Data

Code	Aspirator	Stage 1 filter	Stage 2 filter
WFPN00000000000	1400 RPM	Cardboard filter Andreae eff.98%	Paint-stop fibreglass filters

MADE IN ITALY

Photogallery

MADE IN ITALY

Secureair
Via Stroppiana, 15 - 10071 Borgaro torinese (Torino) Italy
Tel. +39 011 4502031 – Fax +39 011 47 03 927 - info@secureair.it - www.secureair.it

Related accessories

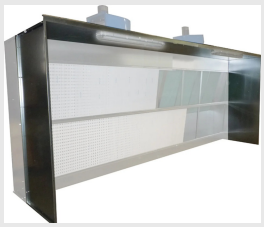

Galvanized side extensions and roof cabins WF

WFP0PLT00000000

Pair of side walls and upper roof made of galvanized sheet metal with a standard length of 900mm (other sizes at choice) for paint and powder suction wall booths model WF.

aTEX kit for WFPN suction walls

WFPNKITEX000000

ATEX components for suction walls model WFPN.

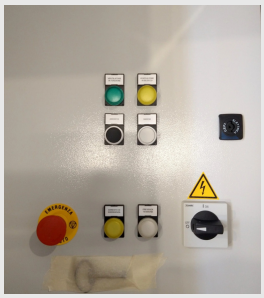

Electrical panel for paint booths

QED00000000CABV

Electrical panel for starting, protection, and management of MFP and WFP series cabin lights with three-phase power supply.

MADE IN ITALY

Related Products

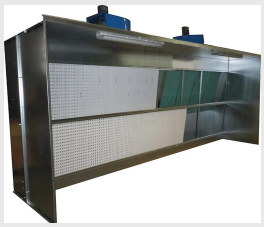

WFPL spray booth suction wall with activated charcoal

WFPL00000000000

WFPL dry painting booths in wall-mounted execution, are equipped with integrated filters and exhaust fans and thanks to their geometry form a suction front at constant speed so as to capture the exhalations produced by operations such as painting, resin coating, gluing and in all those professional treatments that generate non-dusty exhalations and oversprays.

MADE IN ITALY