Secureair
Via Stroppiana, 15 - 10071 Borgaro torinese (Torino) Italy
Tel. +39 011 4502031 – Fax +39 011 47 03 927 - info@secureair.it - www.secureair.it

Ceiling bracket for CLAB 50 and 75 arms



COD: SSCLAB507500000

Aluminium ceiling bracket, lengths mm500 to mm2000 for CLAB50mm arms.

Insight

The ceiling mount functions as a simple and stable duct for outgoing air, avoiding expensive ducts and additional holes in the ceiling.
The brackets are made of special anodised aluminium square section for elegant installation and clean aesthetics.

MADE IN ITALY

Secureair
Via Stroppiana, 15 - 10071 Borgaro torinese (Torino) Italy
Tel. +39 011 4502031 – Fax +39 011 47 03 927 - info@secureair.it - www.secureair.it

Dimensions

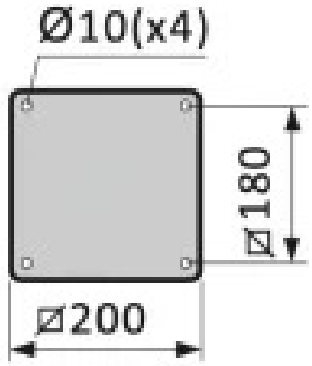

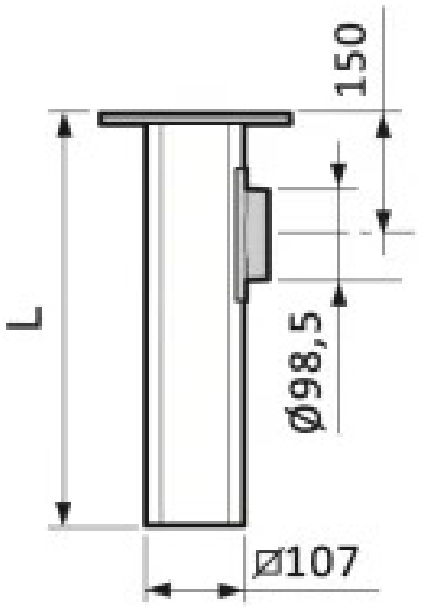

Code	L mm
SSCLAB507525000	250
SSCLAB507550000	500
SSCLAB507575000	750
SSCLAB507510000	1000
SSCLAB507512500	1250
SSCLAB507515000	1500
SSCLAB507517500	1750
SSCLAB507520000	2000

MADE IN ITALY

Secureair
Via Stroppiana, 15 - 10071 Borgaro torinese (Torino) Italy
Tel. +39 011 4502031 – Fax +39 011 47 03 927 - info@secureair.it - www.secureair.it

Technical Data

Code	Weight kg
SSCLAB507525000	3.15
SSCLAB507550000	3.8
SSCLAB507575000	4.5
SSCLAB507510000	5.15
SSCLAB507512500	5.8
SSCLAB507515000	6.45
SSCLAB507517500	7.1
SSCLAB507520000	7.75

MADE IN ITALY

Secureair
Via Stroppiana, 15 - 10071 Borgaro torinese (Torino) Italy
Tel. +39 011 4502031 – Fax +39 011 47 03 927 - info@secureair.it - www.secureair.it

Photogallery



MADE IN ITALY

Secureair
Via Stroppiana, 15 - 10071 Borgaro torinese (Torino) Italy
Tel. +39 011 4502031 – Fax +39 011 47 03 927 - info@secureair.it - www.secureair.it

Related accessories



Ceiling bracket for CLAB 100 arms

SSCLAB100000000

Aluminium ceiling bracket, lengths mm500 to mm2000 for CLAB100mm arms.

MADE IN ITALY

Related Products



CLAB 50/75/100mm laboratory suction arm for ceiling mounting

CLAB50751000000

The **CLAB laboratory arm** is designed for localized suction in workstations where high mobility is required, such as in chemical laboratories, universities, schools, chemical, pharmaceutical and electronic industries.
NB: hood excluded, to be selected from accessories.

MADE IN ITALY