Secureair
Via Stroppiana, 15 - 10071 Borgaro torinese (Torino) Italy
Tel. +39 011 4502031 – Fax +39 011 47 03 927 - info@secureair.it - www.secureair.it

Vertical air outlet channel H1 mt suction desks

Sectors

Applications Fix

Issues Fumes, Powders

COD: KITSCARICAMBSBT

Vertical air exhaust kit consisting of upward flanged side bend and mt 1 rectangular duct with top grille.

Insight

- **Compatibility**: suitable for SB screeds
- **Construction**: high quality galvanised sheet metal, with flange bolted to the bench and expulsion mesh on the top outlet.
- **Use**: thanks to the curve and the vertical outlet, it is possible to return the purified air expelled by the bench to the environment, conveying the flow upwards, avoiding raising dust on the floor and reducing noise (version with additional silencer on request)

We recommend using it in combination with the wheel kit to create a truly independent and portable workstation.
In this way the bench can be moved without the need for complicated air expulsion lines, for maximum flexibility of use.
Alternatively, it is possible to connect the expulsion to an atmospheric emission kit.

MADE IN ITALY

Secureair
Via Stroppiana, 15 - 10071 Borgaro torinese (Torino) Italy
Tel. +39 011 4502031 – Fax +39 011 47 03 927 - info@secureair.it - www.secureair.it

Dimensions

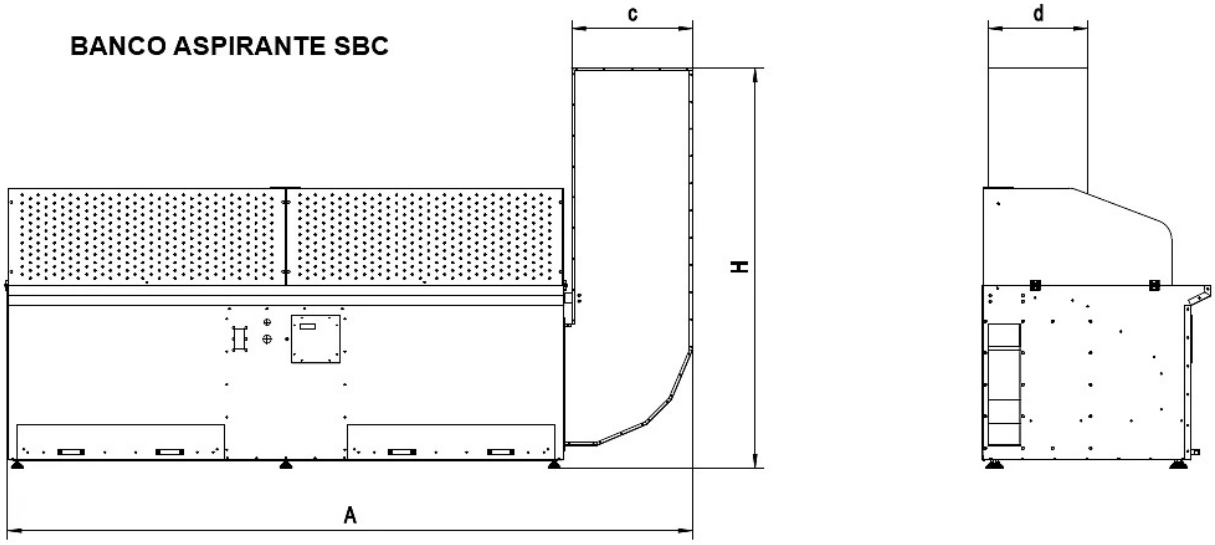

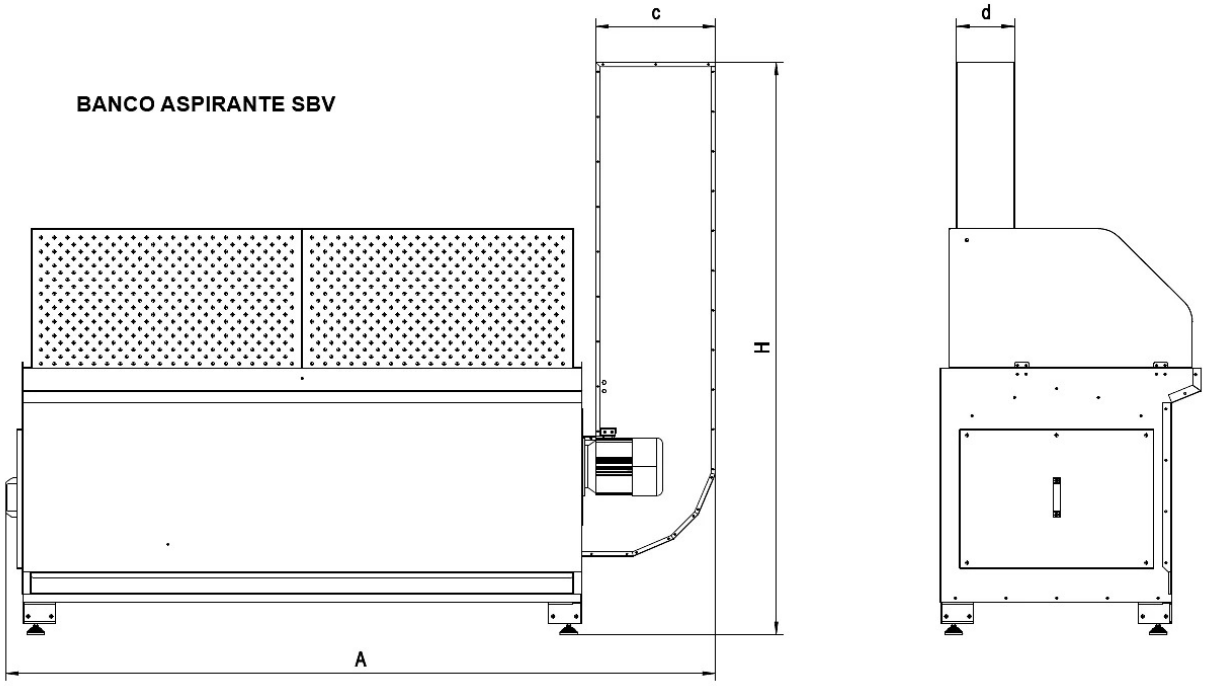

Code	A mm	c mm	d mm	H mm
KITSCARMBSBC10T	1490	450	160	2020
KITSCARMBSBV10T	1450	415	200	1975
KITSCARMBSBC15T	1990	450	160	2020
KITSCARMBSBV15T	1950	415	200	1975
KITSCARMBSBC20T	2490	610	500	2020
KITSCARMBSBV20T	2450	415	200	1975

MADE IN ITALY

Secureair
Via Stroppiana, 15 - 10071 Borgaro torinese (Torino) Italy
Tel. +39 011 4502031 – Fax +39 011 47 03 927 - info@secureair.it - www.secureair.it

Code	A mm	c mm	d mm	H mm
KITSCARMBSBC30T	3550	610	500	2020
KITSCARMBSBV30T	3550	415	200	1975

MADE IN ITALY

Secureair
Via Stroppiana, 15 - 10071 Borgaro torinese (Torino) Italy
Tel. +39 011 4502031 – Fax +39 011 47 03 927 - info@secureair.it - www.secureair.it

Related Products

SBV suction bench with integrated fan and filters

SBV000000000000

The SBV extraction bench is designed to protect the operator from fumes and volatile dust emitted by professional processes such as welding, deburring, sanding, or grinding metals in the metalworking industry, foundries, and all sectors where surface treatments are carried out with dry abrasives. It is also used for cleaning parts or blowing off dust from components.
The extraction bench is ready for use, with no need for external fans, filters, or electrical connections, as the on/off switch is already equipped with a three-phase plug.
The basic version of the bench, as shown in the price list below, comes complete with a worktop, suction front, magnetothermal on/off switch wired to the motor, and adjustable feet.

SBC suction bench with fan and self-cleaning filters

SBC000000000000

The **SBC extraction bench** is available in 4 different sizes ranging from 1 to 3 meters. Designed to extract fumes and dust during professional operations that produce emissions that are hazardous to operators and the working environment due to their high volatility. This version is suitable for intensive use thanks to its **compressed air cleaning cartridge filters,** which guarantee maximum filtration efficiency at the end of the cycle and a long service life.

SBA suction bench for centralised systems

SBA000000000000

The **SBA suction bench** is the ideal solution for vacuuming up fumes and dust and **working safely** when welding, deburring, sanding or grinding metals. In fact, the practical and sturdy suction bench top ensures**widespread suction on the work surface** and frontally, protecting the operator's respiratory tract.

SBP suction bench for blow moulding dry parts

SBP000000000000

The **SBP vacuum bench** is to be used to vacuum dust generated during cleaning and blowing parts with compressed air to prevent it from being breathed in by operators and polluting the work environment, as it is very volatile.

MADE IN ITALY

SBF suction bench with integrated filters

SBF000000000000

The **SBF suction bench** is to be used to suck in fumes and dust during welding, deburring, sanding or grinding operations on metals and in all areas where surface treatments with dry abrasives are carried out.

MADE IN ITALY