Secureair
Via Stroppiana, 15 - 10071 Borgaro torinese (Torino) Italy
Tel. +39 011 4502031 – Fax +39 011 47 03 927 - info@secureair.it - www.secureair.it

Galvanized side extensions and roof cabins WF

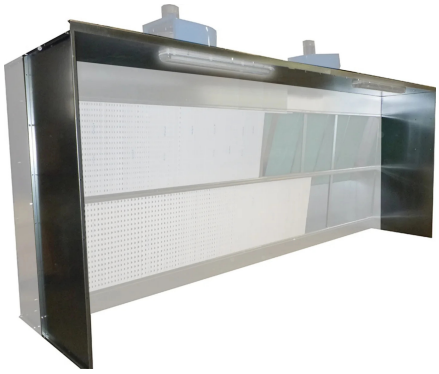

Sectors Painting,

Applications Fix

Issues VOC fumes

COD: WFP0PLT00000000

Pair of side walls and upper roof made of galvanized sheet metal with a standard length of 900mm (other sizes at choice) for paint and powder suction wall booths model WF.

Insight

Lateral extensions and underneath are made like the cabin structure from sturdy prime galvanized sheet metal, machined with a numerically controlled punching machine and press-folded with a 6-axis computerized bending machine. There are no welds for maximum durability and reduction of corrosion phenomena.
Due to this containment, the suction efficiency of the system increases, as dispersion into the environment due to horizontal air currents is reduced.

MADE IN ITALY

Secureair
Via Stroppiana, 15 - 10071 Borgaro torinese (Torino) Italy
Tel. +39 011 4502031 – Fax +39 011 47 03 927 - info@secureair.it - www.secureair.it

Example of spray booth installation with extensions and roof, complete with lights and control panel (WFPX)

MADE IN ITALY

Secureair
Via Stroppiana, 15 - 10071 Borgaro torinese (Torino) Italy
Tel. +39 011 4502031 – Fax +39 011 47 03 927 - info@secureair.it - www.secureair.it

Dimensions

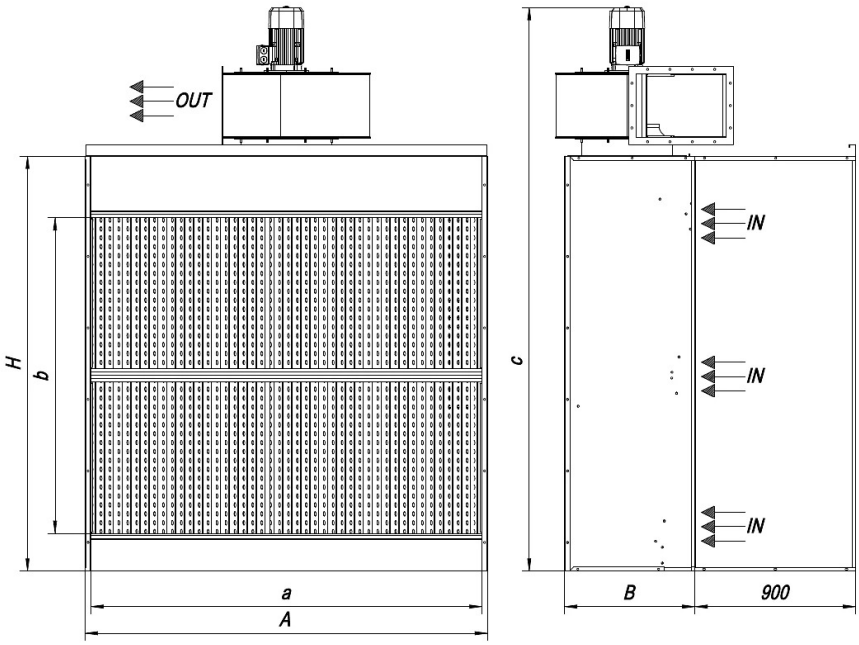

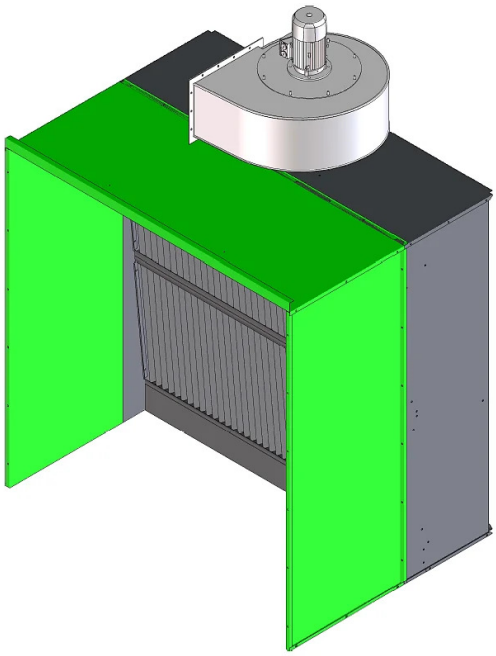

Code	A mm	a mm	B mm	b mm	c mm	H mm
WFP0PLT00000020	2250	2190	730	1840	3240	2320
WFP0PLT00000030	3150	3090	730	1840	3240	2320
WFP0PLT00000040	4050	3990	730	1840	3240	2320
WFP0PLT00000050	4950	4890	730	1840	3240	2320

MADE IN ITALY

Secureair
Via Stroppiana, 15 - 10071 Borgaro torinese (Torino) Italy
Tel. +39 011 4502031 – Fax +39 011 47 03 927 - info@secureair.it - www.secureair.it

Technical Data

Code	Power kW	Nominal flow rate m3 / h	Useful pressure Pa	Activated carbon kg
WFP0PLT00000020	1,5	8000	300	57
WFP0PLT00000030	2,2	12000	300	95
WFP0PLT00000040	4	16000	300	114
WFP0PLT00000050	2 x 1,5	20000	300	152

MADE IN ITALY

Secureair
Via Stroppiana, 15 - 10071 Borgaro torinese (Torino) Italy
Tel. +39 011 4502031 – Fax +39 011 47 03 927 - info@secureair.it - www.secureair.it

Related Products

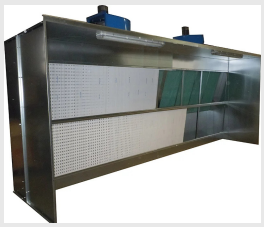

WFPL spray booth suction wall with activated charcoal

WFPL00000000000

WFPL dry painting booths in wall-mounted execution, are equipped with integrated filters and exhaust fans and thanks to their geometry form a suction front at constant speed so as to capture the exhalations produced by operations such as painting, resin coating, gluing and in all those professional treatments that generate non-dusty exhalations and oversprays.

WFPN spray booth suction wall

WFPN00000000000

WFPN spray booths are equipped with integrated dry filtration and exhaust fan and due to their geometry form a constant speed suction front so as to capture pollutants produced by operations such as painting, resin coating, gluing and in all those professional treatments that generate application overspray.

MADE IN ITALY