Secureair
Via Stroppiana, 15 - 10071 Borgaro torinese (Torino) Italy
Tel. +39 011 4502031 – Fax +39 011 47 03 927 - info@secureair.it - www.secureair.it

DFC11 dust and fume extractor with self-supporting arm

Sectors Sanding, Grinding, Welding, Powder blowing,

Applications Mobile

Issues Powders, Fumes

COD: **DFC11MB00000000**

The DFC11 mobile dust and fume extractor with self-cleaning filters is the ideal solution for extracting and filtering fumes and micro-dust generated during surface treatment processes on metals or composite materials.

MADE IN ITALY

Secureair
Via Stroppiana, 15 - 10071 Borgaro torinese (Torino) Italy
Tel. +39 011 4502031 – Fax +39 011 47 03 927 - info@secureair.it - www.secureair.it

Insight

The **DFC11** mobile fume and dust extractor is designed to protect operators and the work environment from dust, shavings, fumes, and even very fine and volatile micro-dust generated during the surface treatment of metals, composite materials, and in general by all professional processes that produce airborne volatile pollutants.
It does not require any special installation and is supplied ready for use, simply requiring a power supply and compressed air.
The air, filtered with 99% efficiency, is returned to the environment or, on request, can be channeled outside where regulations do not allow recirculation.
The **DFCB** version comes complete with a self-supporting suction arm with a working radius of 2, 3, or 4 meters and can be moved 180° in front of the machine. The suction hood is equipped with a comfortable ergonomic handle for simple and effective positioning and suction as close as possible to the point of emission, as required by workplace safety regulations.
Thanks to the integrated fan and cartridge filters with timed pneumatic cleaning, it is a highly efficient dust extractor, ideal for many applications such as:

- Welding fumes and portable thermal cutting
- Grinding, deburring, or sanding dust
- Dust from emptying drums or handling

Its compact size, wheels, and handles ensure easy movement close to the work area, allowing pollutants to be extracted using the accessories available in the various versions, such as flexible hoses or suction arms on the machine.

TECHNICAL DATA

Nominal flow rate 2000 m^3/h
Motor power 1.1 kW
Sound level 79 dB(A) at 1.5 m in free field
Filtering efficiency 99%

AVAILABLE VERSIONS

- DFCMB1 with standard arm, diameter 160 mm, and plastic hood, single-phase 220V
- DFCMB2 with oversized arm, diameter 200 mm, and metal hood, single-phase 220V
- DFCTB1 with standard arm (diameter 160 mm) and plastic hood, three-phase 400V
- DFCTB2 with oversized arm (diameter 200 mm) and metal hood, three-phase 400V

ADVANTAGES AND OPERATION

- Compact design developed in height for minimum space requirements in production
- Rapid extraction of fumes and dust close to the source thanks to high flow rate;
- Mobile: allows you to reach various welding points;
- Filtered air is returned to the environment
- Pre-chamber for spark, chip, and heavy dust suppression
- Dust and chip collection drawer located on the side of the machine, with nylon bag on request
- Final filtration with polyester cartridge filter, efficiency ≥99%
- Automatic cleaning of filters with compressed air, for maximum energy savings and long filter element life

TECHNICAL SPECIFICATIONS

- Sturdy galvanized or painted sheet metal construction
- Large filtering surface with polyester/antistatic polyester or Teflon-coated cartridges;
- Automatic cleaning of filters with compressed air;
- Built-in fan with high-efficiency motor;
- Practical collection drawer;
- Single-phase 220/1/50Hz or three-phase 400/3/50 power supply with industrial plug
- Suction on/off switch;
- Adjustable filter cleaning timer;
- Handles for easy handling.

MADE IN ITALY

Secureair
Via Stroppiana, 15 - 10071 Borgaro torinese (Torino) Italy
Tel. +39 011 4502031 – Fax +39 011 47 03 927 - info@secureair.it - www.secureair.it

Dimensions

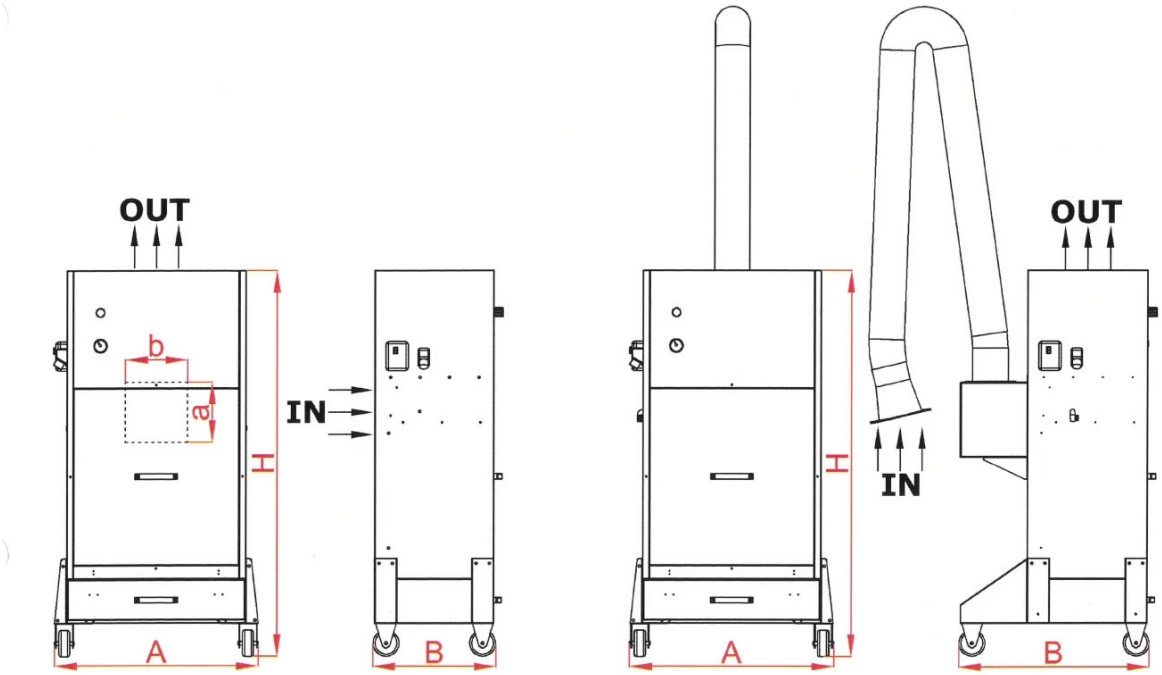

See documentation for drawings and technical data sheet

Code	Drawer L	A mm	a mm	B mm	b mm	C mm	D mm	H mm	H1 mm	Ø mm
DFC11MB00000000	70	810	270	540	280	920	870	1750	2650	160

Technical Data

Code	Power kW	Nominal flow rate m3 / h	Liv son Db (A)	Filter effect %	Air filter type	Supply voltage	Long arm meters	Max air ° C
DFC11MB00000000	1,1	2000	79	99	cartridges	220/1/50 - 400/3/50	2-3-4	60

MADE IN ITALY

Secureair
Via Stroppiana, 15 - 10071 Borgaro torinese (Torino) Italy
Tel. +39 011 4502031 – Fax +39 011 47 03 927 - info@secureair.it - www.secureair.it

Photogallery

MADE IN ITALY

Related accessories

Hopper and dust collection container kit for DFC11 purifier

TRAMCONTDFC0000

Hopper and dust collection container kit for DFC11 purifier.

MADE IN ITALY

Secureair
Via Stroppiana, 15 - 10071 Borgaro torinese (Torino) Italy
Tel. +39 011 4502031 – Fax +39 011 47 03 927 - info@secureair.it - www.secureair.it

Related spare parts

Replacement cartridge kit for DFC11

Original replacement: no.1 pair of polyester cartridges for DFC11

MADE IN ITALY