Secureair
Via Stroppiana, 15 - 10071 Borgaro torinese (Torino) Italy
Tel. +39 011 4502031 – Fax +39 011 47 03 927 - info@secureair.it - www.secureair.it

WFPE suction wall without fan, for centralized systems

Sectors Painting,

Applications Fix

Issues VOC fumes, Odours

COD:

WFPE00000000000

WFPE suction walls are designed to be connected to a suction system with an external fan. They are equipped with dry filtration and due to their geometry form a constant velocity suction front so as to capture pollutants produced by operations such as painting, resin coating and bonding.

Insight

WFPN version

This version comes complete with:

- Andreae® eff 98% cardboard inertial pre-filter
- Fiberglass paint-stop filters
- Provision for activated carbon

Construction

Structure and panels are made of sturdy galvanized sheet metal, machined with a numerically controlled punching machine and press-folded with a 6-axis computerized bending machine. There are no welds for maximum durability and reduction of corrosion phenomena. All panels are gasketed with silicone sealants and bolted together with high-strength bolts.

The wall enclosure forms a suction cabinet with the first suction veil inclined: this solution is designed to optimize suction over the entire front surface.

Practical application - expert's advice

This version does not have an aspirator, so it should be placed inside an aspiration system, or with an external aspirator. Ideal use is wall-mounted installation of the cabin, resulting in positioning of the operator and work area as close as possible to the suction front. Side extensions and roof are strongly recommended, so as to protect the application area from side drafts that would counteract the suction capacity of the cabin wall vacuum.

Available accessories

- Ceiling lights
- Activated carbon in panels
- Exhaust silencer
- Piping and chimney
- Side wall and roof extensions
- Centrifugal fan

Other versions are also available complete with fan, electrical panel, lighting fixtures and activated carbon, see reference category.

MADE IN ITALY

Secureair
Via Stroppiana, 15 - 10071 Borgaro torinese (Torino) Italy
Tel. +39 011 4502031 – Fax +39 011 47 03 927 - info@secureair.it - www.secureair.it

Dimensions

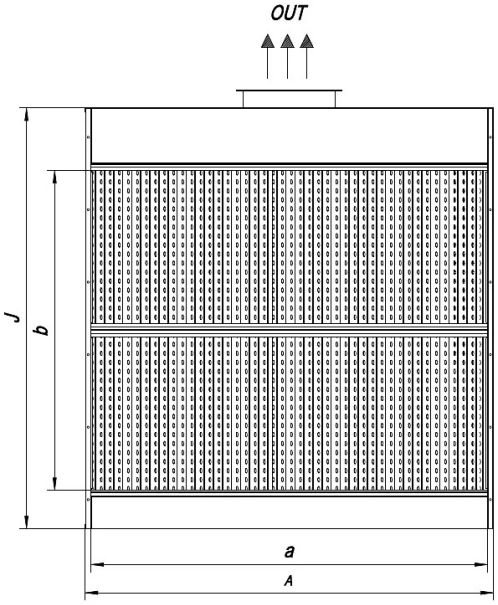

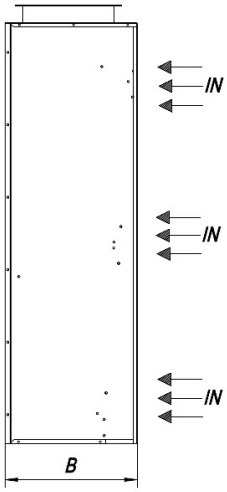

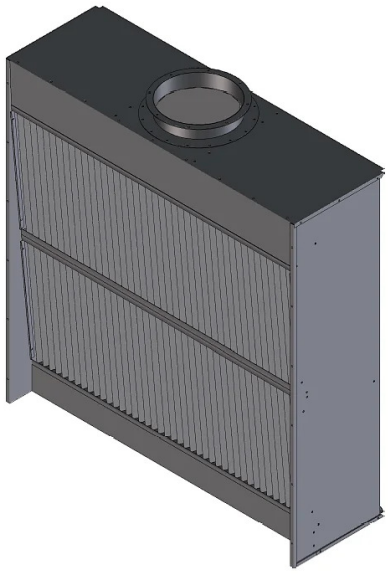

Code	A mm	a mm	B mm	b mm	j mm
WFPE20000000000	2250	2190	730	1840	2320
WFPE30000000000	3150	3090	730	1840	2320
WFPE40000000000	4050	3990	730	1840	2320
WFPE50000000000	4950	4890	730	1840	3220

MADE IN ITALY

Secureair
Via Stroppiana, 15 - 10071 Borgaro torinese (Torino) Italy
Tel. +39 011 4502031 – Fax +39 011 47 03 927 - info@secureair.it - www.secureair.it

Technical Data

Code	Power kW	Nominal flow rate m3 / h	Useful pressure Pa	Pipe diameter mm
WFPE20000000000	1,5	8000	300	500
WFPE30000000000	2,2	12000	300	630
WFPE40000000000	3	16000	300	710
WFPE50000000000	4	20000	300	810

MADE IN ITALY

Secureair
Via Stroppiana, 15 - 10071 Borgaro torinese (Torino) Italy
Tel. +39 011 4502031 – Fax +39 011 47 03 927 - info@secureair.it - www.secureair.it

Technical Data

Code	Aspirator	Stage 1 filter	Stage 2 filter
WFPE00000000000	1400 RPM	Cardboard filter Andreae eff.98%	Paint-stop fibreglass filters

MADE IN ITALY

Related Products

WFPN spray booth suction wall

WFPN00000000000

WFPN spray booths are equipped with integrated dry filtration and exhaust fan and due to their geometry form a constant speed suction front so as to capture pollutants produced by operations such as painting, resin coating, gluing and in all those professional treatments that generate application overspray.

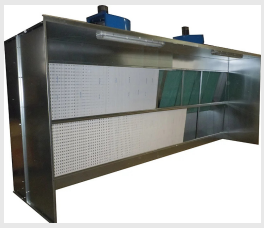

WFPL spray booth suction wall with activated charcoal

WFPL00000000000

WFPL dry painting booths in wall-mounted execution, are equipped with integrated filters and exhaust fans and thanks to their geometry form a suction front at constant speed so as to capture the exhalations produced by operations such as painting, resin coating, gluing and in all those professional treatments that generate non-dusty exhalations and oversprays.

MADE IN ITALY