Secureair
Via Stroppiana, 15 - 10071 Borgaro torinese (Torino) Italy
Tel. +39 011 4502031 – Fax +39 011 47 03 927 - info@secureair.it - www.secureair.it

Centrifugal in line fan SCC

Sectors Plant Components, Ventilation, Laboratories and Medic

Applications: Fix

Issues Medical, Odours

COD: SCC000000000000

The SCC ducted inline centrifugal fans are very easy to use thanks to the quick fastening with inline or parallel installation and the single-phase 230V Hz50 2-speed motors.

Detailed description

These ducted fans thanks to the special configuration combine the typical advantage of helical fans of being able to transport air on the horizontal axis, with the high efficiencies of a centrifugal impeller in a metal body.
They are very easy to use thanks to quick fastening with in-line or parallel installation and single-phase 230V Hz50 2-speed motors.
The removable body allows for easy cleaning and maintenance.

Construction:
- Galvanized steel case
- Single-phase electric motor, IP 44, class B, thermo-protected, suitable for operation by speed controller
- High-efficiency backward-bladed impeller
- Fluid thread rectifier
- External electrical connections in self-extinguishing technopolymer case, IP 54 protection

MADE IN ITALY

Secureair
Via Stroppiana, 15 - 10071 Borgaro torinese (Torino) Italy
Tel. +39 011 4502031 – Fax +39 011 47 03 927 - info@secureair.it - www.secureair.it

Dati tecnici Technical data	Modello - Model												
	100A	100B	125A	125B	150A	150B	160A	160B	200A	200B	250	315A	315B
Velocità di rotazione (rpm) Rpm speed (rpm)	1980	2530	1700	2400	2400	2470	2400	2550	2450	2550	2550	2850	2630
Livello sonoro (dBA) Noise level (dBA)	40	47	38	50	52	53	51	53	52	53	55	53	57
Tensione Tension	230V 50Hz	230V 50Hz	230V 50Hz	230V 50Hz	230V 50Hz	230V 50Hz	230V 50Hz	230V 50Hz	230V 50Hz	230V 50Hz	230V 50Hz	230V 50Hz	230V 50Hz
Potenza (kW) Power (kW)	0,06	0,06	0,07	0,07	0,06	0,08	0,07	0,11	0,08	0,15	0,18	0,18	0,29
Corrente (A) Power amps (A)	0,25	0,35	0,25	0,38	0,25	0,38	0,38	0,43	0,42	0,78	0,78	0,78	1,24
Regolatore Regulator	RV/1,5A	RV/1,5A	RV/1,5A	RV/1,5A	RV/1,5A	RV/1,5A	RV/1,5A	RV/1,5A	RV/1,5A	RV/1,5A	RV/1,5A	RV/1,5A	RV/3A
Peso netto ventilatore (kg) Fan net weight (kg)	3	3	3	3	3	5	3	5	5	5	5	8	9

	Q=m³/h - Portata - Flow													
Pt Pressione totale (mmH2O) Total pressure (mmH2O)	5	170	240	200	300	350	500	400	700	800	1000	1080	1230	1600
	10	150	200	180	250	240	400	300	600	600	950	1000	1100	1500
	15	125	170	40	200	220	320	250	500	500	900	1000	1050	1350
	20	100	140	100	160	180	280	200	420	430	800	900	1000	1300
	25	40	100	50	100	100	200	125	320	300	700	750	800	1200
	30		30		40	40	100	40	220	200	620	600	600	1050
	35						50		100	100	550	500	400	900
	40										500	400	300	800
	45										450	300	200	500
	50										400	250		400
	60										250	100		200
	70										100			
Dimensione (mm) Dimension (mm)	A	287	287	287	287	287	287	287	354	354	354	354	354	354
	Ø B	98	98	123	123	148	148	158	158	198	198	248	313	313
	Ø D	275	275	275	275	275	275	275	345	345	345	345	345	345
	D	17	17	24	24	32	32	32	24	34	34	48	48	48
	E	70	70	70	70	70	70	70	84	84	84	84	84	84
	F	242	242	242	242	242	242	242	272	272	272	272	272	272
	G	282	282	282	282	282	282	282	345	345	345	345	345	345
	H	12	12	12	12	12	12	12	12	12	12	12	12	12
	Kg	3	3	3	3	3	3	3	5,5	4	5,5	5,5	5,5	6

MADE IN ITALY

Secureair
Via Stroppiana, 15 - 10071 Borgaro torinese (Torino) Italy
Tel. +39 011 4502031 – Fax +39 011 47 03 927 - info@secureair.it - www.secureair.it

Dimensions

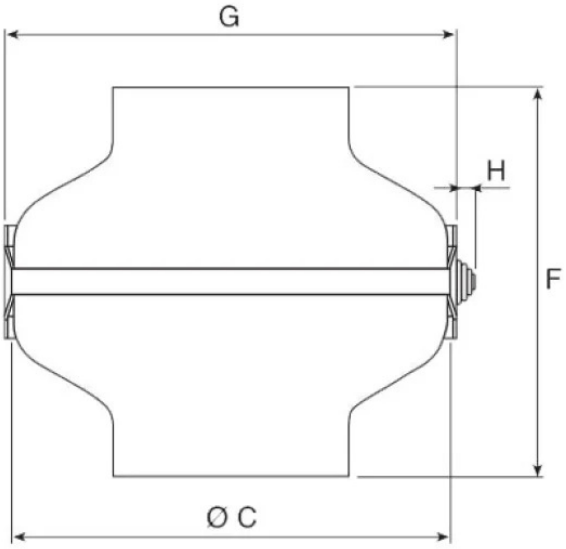

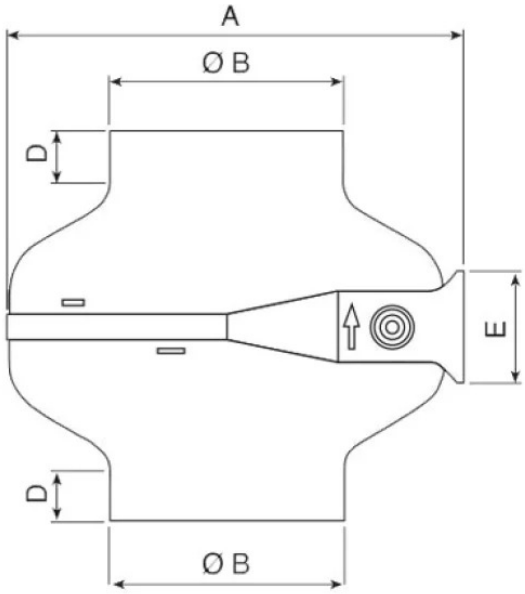

Code	A mm	Ø B mm	D mm	E mm	G mm	H mm	Ø F mm	ØD mm
SCC00000000100A	287	98	17	70	282	12	242	275
SCC00000000100B	287	98	17	70	282	12	242	275
SCC00000000125A	287	123	24	70	282	12	242	275
SCC00000000125B	287	123	24	70	282	12	242	275
SCC00000000150A	287	148	32	70	282	12	242	275
SCC00000000150B	287	148	32	70	282	12	242	275
SCC00000000160A	287	158	32	70	282	12	242	275
SCC00000000160B	354	158	24	84	345	12	272	345
SCC00000000200A	354	198	34	84	345	12	272	345
SCC00000000200B	354	198	34	84	345	12	272	345
SCC000000000250	354	248	48	84	345	12	272	345
SCC00000000315A	354	313	48	84	345	12	272	345
SCC00000000315B	354	313	48	84	345	12	272	345

MADE IN ITALY

Secureair
Via Stroppiana, 15 - 10071 Borgaro torinese (Torino) Italy
Tel. +39 011 4502031 – Fax +39 011 47 03 927 - info@secureair.it - www.secureair.it

Technical Data

Code	Power kW	Noise Db (A)	Noise level dB	Voltage V	Rotational speed rpm	Current A	Regulator RV	Fan net weight kg
SCC00000000100A	0,06	40	40	230	1990	0.25	1,5A	3
SCC00000000100B	0,06	47	47	230	2530	0.35	1,5A	3
SCC00000000125A	0,07	50	50	230	2400	0.38	1,5A	3
SCC00000000125B	0,07	39	39	230	1700	0.25	1,5A	3
SCC00000000150A	0,06	52	52	230	2400	0.25	1,5A	3
SCC00000000150B	0,08	53	53	230	2470	0.38	1,5A	5
SCC00000000160A	0,07	51	51	230	2400	0.38	1,5A	3
SCC00000000160B	0,11	53	53	230	2550	0.43	1,5A	5
SCC00000000200A	0,08	52	52	230	2450	0.42	1,5A	5
SCC00000000200B	230	53	53	230	2550	0.78	1,5A	5
SCC000000000250	0,18	55	55	230	2550	0.78	1,5A	5
SCC00000000315A	0,18	53	53	230	2650	0.78	1,5A	8
SCC00000000315B	0,29	57	57	230	2630	1.24	3A	9

MADE IN ITALY

Photogallery

MADE IN ITALY

Secureair
Via Stroppiana, 15 - 10071 Borgaro torinese (Torino) Italy
Tel. +39 011 4502031 – Fax +39 011 47 03 927 - info@secureair.it - www.secureair.it

Accessories

Single-phase speed controller for fans

REGVELMONO00000

Speed controll ers are ideal for controlling **single-phase motors of** axial or centrifugal **fans** , single or double inlet or box fans.

MADE IN ITALY

Related products

SCT inline centrifugal fan

SCT000000000000

SCT intubated inline centrifugal fans are very easy to use thanks to quick mounting with inline or parallel installation and single-phase 230V Hz50 2-speed motors.

MADE IN ITALY