Secureair
Via Stroppiana, 15 - 10071 Borgaro torinese (Torino) Italy
Tel. +39 011 4502031 – Fax +39 011 47 03 927 - info@secureair.it - www.secureair.it

VXH22 high-pressure welding fume extractor

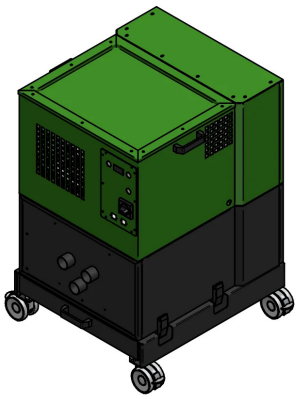

Sectors Welding,

Applications Mobile

Issues Fumes, Powders

COD: VXH102200000000

Latest generation **VXH22** mobile **welding fume purifier** on wheels, with HEPA H13 final filtration and W3 certification.

Insight

The VXH22 welding fume purifier is designed for optimal high-pressure suction of fumes through two welding suction flashlights at the same time or from other applications requiring small-section piping.

Technical features

- suction from up to 2 flashlights at the same time
- Power 2200Watt 400/3/50 three-phase
- Max flow rate 240mc/h
- Nominal depression 250 mBar
- Sound level 75db(A) at 1.5m in free field
- Weight 80kg

Filter section

- stage 1: pre-chamber stilling for abatement of larger particle size
- stage 2: eff 99% polyester cartridge filtration
- stage 3: HEPA panel H13 99.9%
- optional: activated carbon panel for deodorization

The high-pressure welding fume extractor with integrated filtration (99.9% 0.3micron micrometer abatement) to be connected to max. no. 2 SAT line suction flashlights, is specifically for industrial use in continuous operation (100% duty cycle) thanks to the robust aluminum blower/turbine with a three-phase motor of primary brand. The aspirator is designed for operation in manual or automatic mode ; in the latter, the aspirator is activated and, by means of a timer, deactivated in synchrony with the welding cycle.

- The maximum distance, length of the hose, between the suction point and the fume production point is 20-25m.
- Ideal solution for one or two welding stations and re introduction of fumes into the environment (where permitted) or directly with expulsion to the outside (with accessory)
- Automatic activation during arc initiation makes it fully automatic without loss of productivity.

Construction

- sturdy powder-coated steel frame and panels
- smoke inlet chamber and cartridge housing made of 20/10 sheet metal sealed
- electrical panel for control and protection

MADE IN ITALY

Secureair
Via Stroppiana, 15 - 10071 Borgaro torinese (Torino) Italy
Tel. +39 011 4502031 – Fax +39 011 47 03 927 - info@secureair.it - www.secureair.it

Dimensions

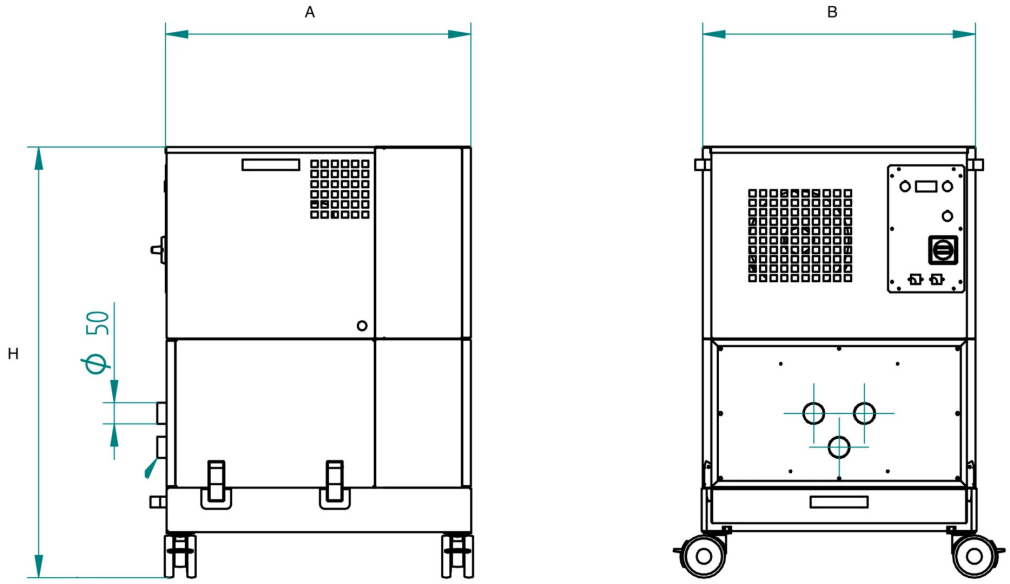

Code	A mm	B mm	H mm
VXH102200000000	720	640	1020

Technical Data

Code	Power kW	Nominal flow rate m3 / h	Useful pressure Pa	Liv son Db (A)	Filter effect %	Weight kg	Power supply V	Power supply Hz	Cartridges num.	Pipe diameter mm
VXH102200000000	2,2	240	25000	75	99,9	80	400	50	2	50

MADE IN ITALY

Secureair
Via Stroppiana, 15 - 10071 Borgaro torinese (Torino) Italy
Tel. +39 011 4502031 – Fax +39 011 47 03 927 - info@secureair.it - www.secureair.it

Photogallery

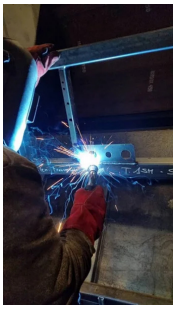

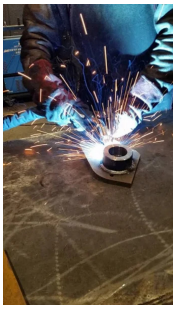

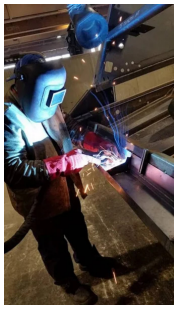

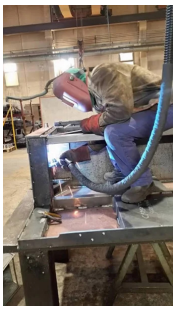

MADE IN ITALY

Related Products

SAT300 air-cooled suction torch

SAT300000000000

the **SAT** welding fume **suction flashlight** system **from Secureair®** is an effective, cost-effective and alternative solution to traditional solutions. The **SAT300 model** is a lightweight suction flashlight, ideal for sheet metal processing with 1-1.2mm wire

SAT350 air-cooled suction torch

SAT350000000000

the **SAT** welding fume **suction flashlight** system **from Secureair®** is an effective, cost-effective and alternative solution to traditional solutions. The **SAT350 model** is a lightweight suction flashlight, ideal for sheet metal processing with 1-1.2mm wire

Welding fume extractor with torch and SATC arm

SATC3A00000000

SATC3A welding fume extractor serving a ready-to-use welding station.

MADE IN ITALY