Secureair
Via Stroppiana, 15 - 10071 Borgaro torinese (Torino) Italy
Tel. +39 011 4502031 – Fax +39 011 47 03 927 - info@secureair.it - www.secureair.it

Galvanized side extensions and roof cabins WFD

Sectors Painting,

Applications Fix

Issues VOC fumes

COD:

WFD0PLT00000000

Pair of side walls and upper roof made of galvanized sheet metal with a standard length of 900mm (other sizes at choice) for paint and powder suction wall booths model WFD.

Insight

Lateral extensions and underneath are made like the cabin structure from sturdy prime galvanized sheet metal, machined with a numerically controlled punching machine and press-folded with a 6-axis computerized bending machine. There are no welds for maximum durability and reduction of corrosion phenomena.
Due to this containment, the suction efficiency of the system increases, as dispersion into the environment due to horizontal air currents is reduced.

MADE IN ITALY

Secureair
Via Stroppiana, 15 - 10071 Borgaro torinese (Torino) Italy
Tel. +39 011 4502031 – Fax +39 011 47 03 927 - info@secureair.it - www.secureair.it

Example of paint booth installation with extensions and roof, complete with lights and electrical panel.

MADE IN ITALY

Secureair
Via Stroppiana, 15 - 10071 Borgaro torinese (Torino) Italy
Tel. +39 011 4502031 – Fax +39 011 47 03 927 - info@secureair.it - www.secureair.it

Dimensions

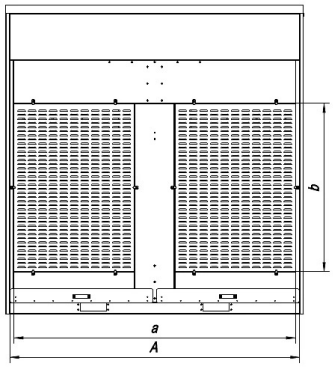

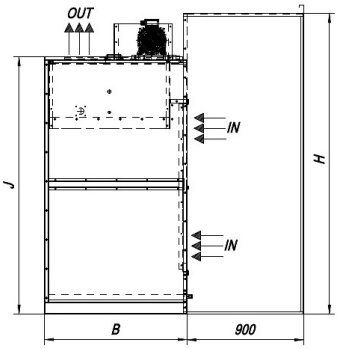

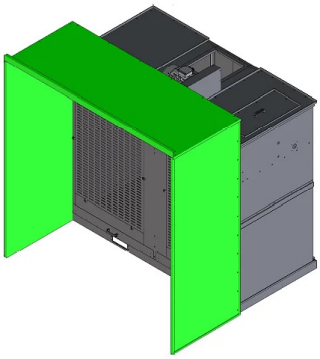

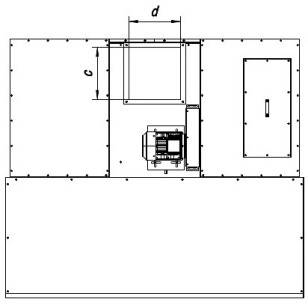

Code	A mm	a mm	B mm	b mm	c mm	d mm	H mm	J mm
WFD0PLT00000020	2250	2190	1100	1300	405	405	2320	1970
WFD0PLT00000030	3150	3090	1100	1300	505	505	2320	1970
WFD0PLT00000040	4050	3990	1100	1300	505	505	2320	1970
WFD0PLT00000050	4950	4890	1100	1300	505	505	2320	1970
WFD0PLT00000060	5850	5790	1100	1300	505	505	2320	1970

MADE IN ITALY

Secureair
Via Stroppiana, 15 - 10071 Borgaro torinese (Torino) Italy
Tel. +39 011 4502031 – Fax +39 011 47 03 927 - info@secureair.it - www.secureair.it

Related Products

WFD suction wall for smoke and dust

WFD000000000000

WFD smoke and dust suction wall is designed for suction of machining dust on large surfaces, sanding, grinding, discarding, etc.

WFDM suction wall for marble, stone, or aggregate dust

WFDM00000000000

The **WFDM** suction wall with integrated filtration is the ideal solution for the suction and 99 percent filtration of dust generated by manual dry processing on marble, stone or other aggregates. Thanks to its cabinet-like design, it is easy to install and ensures the health of operators by protecting them and the work environment from volatile dust, sucked in frontally through specially designed openings at working height.

MADE IN ITALY