Secureair
Via Stroppiana, 15 - 10071 Borgaro torinese (Torino) Italy
Tel. +39 011 4502031 – Fax +39 011 47 03 927 - info@secureair.it - www.secureair.it

FVS mobile fume extractor for forced ventilation

Sectors Ventilation,

Applications Mobile

Issues Fumes

COD: FVS000000000000

The **FVS portable centrifugal fan on a trolley** is designed for forced safety ventilation in confined spaces or extraction of pollutants produced during professional work in a specific work area.

Insight

The FVS trolley-mounted portable centrifugal fan is composed of a structure **without plastic parts** and is especially robust to meet durability requirements on construction sites and during extreme use:

- centrifugal fan with high-efficiency impeller
- copper anti-spark nozzle on sucked air inlets
- italian brand electric motor power 2.2kW/220V/single phase
- connections for flexible hoses diam. 200mm
- no. 7 + 7 mt of reinforced PVC coated polyamide hose diam. 200mm with clamping belts
- electrical panel with motor protection device and single-phase power outlet
- sturdy painted steel trolley for convenient handling with handles and no.2 rubberized wheels

MADE IN ITALY

Secureair
Via Stroppiana, 15 - 10071 Borgaro torinese (Torino) Italy
Tel. +39 011 4502031 – Fax +39 011 47 03 927 - info@secureair.it - www.secureair.it

Dimensions

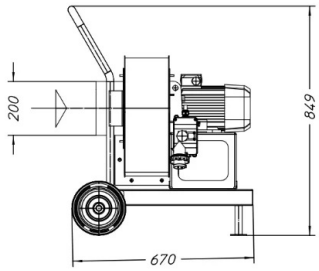

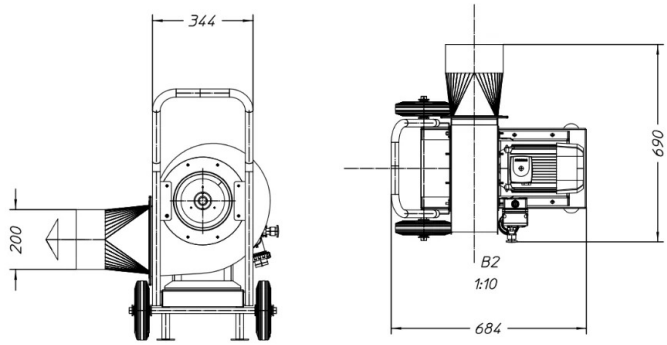

ATEX versions or longer pipes are available on request, please contact our Technical Department for more information.

Code	A mm	B mm	H mm
FVS000000000000	670	690	849

Technical Data

Code	Power kW	Nominal flow rate m3 / h	Useful pressure Pa	Liv son Db (A)	Weight kg	Noise level dB	Motor	Pipe Ø mm	Flex tube	Flex tube length	Standard hood
FVS000000000000	2.2kW/220V/single-phase	1500	1400	75	52	75 dB(A) at 1.5 m in free field (ducted)	Electric	200	pVC-reinforced polyamide	mt 7 (in) + 7 (out)	painted steel with floor support and handle

MADE IN ITALY

Photogallery

MADE IN ITALY

Secureair
Via Stroppiana, 15 - 10071 Borgaro torinese (Torino) Italy
Tel. +39 011 4502031 – Fax +39 011 47 03 927 - info@secureair.it - www.secureair.it

Related Products

SVM industrial centrifugal fans

SVM000000000000

Industrial centrifugal fans with backward-bladed impeller SVM series

SVR industrial centrifugal fans

SVR000000000000

Industrial centrifugal fans with backward-bladed impeller SVR series

SVF industrial centrifugal fans

SVF000000000000

Industrial centrifugal fans with backward-bladed impeller SVF series

MADE IN ITALY