Secureair
Via Stroppiana, 15 - 10071 Borgaro torinese (Torino) Italy
Tel. +39 011 4502031 – Fax +39 011 47 03 927 - info@secureair.it - www.secureair.it

# Industrial 3-blade ceiling fan HVLS3

COD: SLHS00000000000

HVLS 3-Blade Industrial Ceiling Fans.

- 3 Blades Extruded in Anodized Aluminum against Corrosion with Constant Cross Section
- Precabled 3-phase Brushless EC motor equipped with Integrated Electronic System and EMC3 filters
- Sizes with Diameters 2.4m / 3m / 3.6m
- Air Flow Rates up to 134,271 m3/h (AMCA230-99)200
- Max RPM
- Pot. Max Ass. 0.7 kW
- Suitable for continuous duty S1.



MADE IN ITALY

Secureair
Via Stroppiana, 15 - 10071 Borgaro torinese (Torino) Italy
Tel. +39 011 4502031 – Fax +39 011 47 03 927 - info@secureair.it - www.secureair.it

# Insight

HVLS in Italian stands for HIGH FLOW LOW RPM
These are large-scale industrial ceiling fans whose unique technical features can greatly improve summer comfort and winter energy conservation. They can move huge air flow rates and do so at low revolutions. They are an excellent alternative to coolers because they do not affect the ambient humidity level, while still creating a pleasant feeling in operators.

CONSTRUCTION
Upper structure protecting the motor made of welded and painted steel.
The fan is equipped with:
- Decorative canopy to cover electrical cables and brackets for ceiling mounting.
- Safety cable set and tubular L = 800mm supplied.
- Blades made of aluminum EN AW 6063 T6 with anodized treatment against corrosion.
- Aerodynamic blade terminals made of black plastic.
- Hub provided with safety ring.
- Aesthetic hub cover made of black plastic.
- Available in three sizes: 2,400mm to 3,600mm with air flow rates up to 114,000m3/h.
- High-efficiency three-phase brushless EC motors specifically designed for HVLS fans, 200-480Vac/3ph/ 50/60Hz, IP65, equipped with integrated electronics and EMC filters.
- Suitable for continuous duty S1

FEATURES AND BENEFITS
- Absence of gears and aerodynamic design to ensure absolute silence.
- Optimization of HVAC systems and reduction of CO2 emissions, consumption and energy costs.
- Winter comfort achieved by bringing down the heat that stratifies at the top of the rooms, equalizing the temperature and avoiding further heating.
- Summer comfort achieved by keeping the air moving continuously, eliminating annoying hot-cold zones and creating a gentle breeze that promotes natural transpiration and drives away annoying insects.
- No routine maintenance required.
- Steel structure to ensure long life, strength and sturdiness.
- Several systems provided to ensure maximum safety (reinforced main safety cable, additional stabilization cables, hub safety ring).
- Aerodynamic blade terminals to optimize performance and acoustic comfort.
- Hub cover for dust protection and improved design.
- Simplified electrical connections: pre-wired.
- Integrated EMC filters to prevent possible electromagnetic interference with other devices.
- Fans suitable for operation at temperatures from 0°C to +50°C.
- Units are tested in accordance with the latest AMCA standards to ensure maximum reliability of performance data.
- Designed and manufactured according to the Machinery Directive (MD), Low Voltage Directive (LVD) and Electromagnetic Compatibility Directive (EMC).



MADE IN ITALY

Secureair
Via Stroppiana, 15 - 10071 Borgaro torinese (Torino) Italy
Tel. +39 011 4502031 – Fax +39 011 47 03 927 - info@secureair.it - www.secureair.it

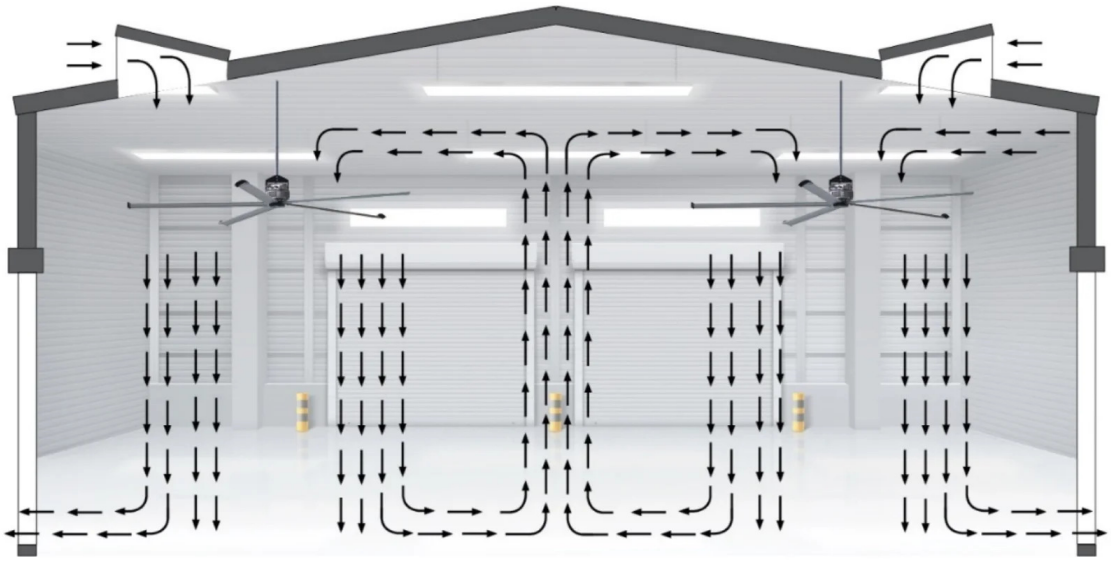

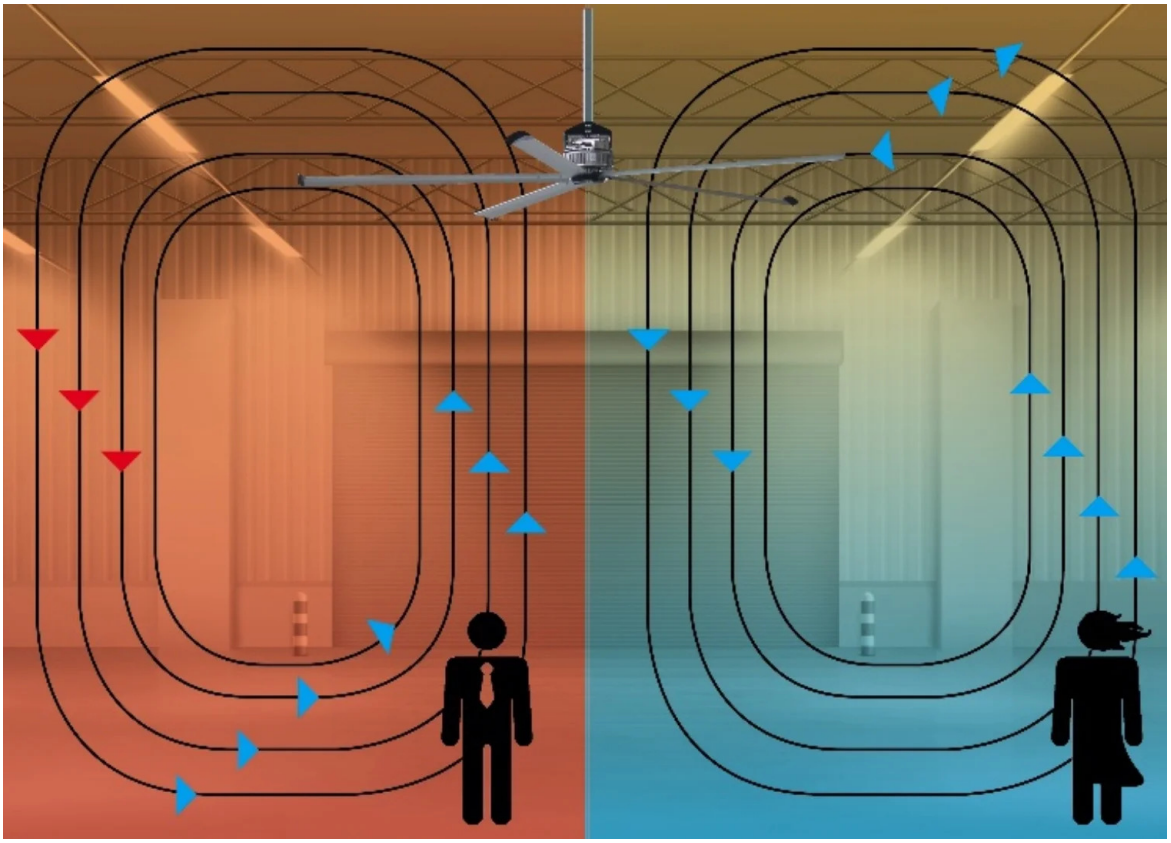

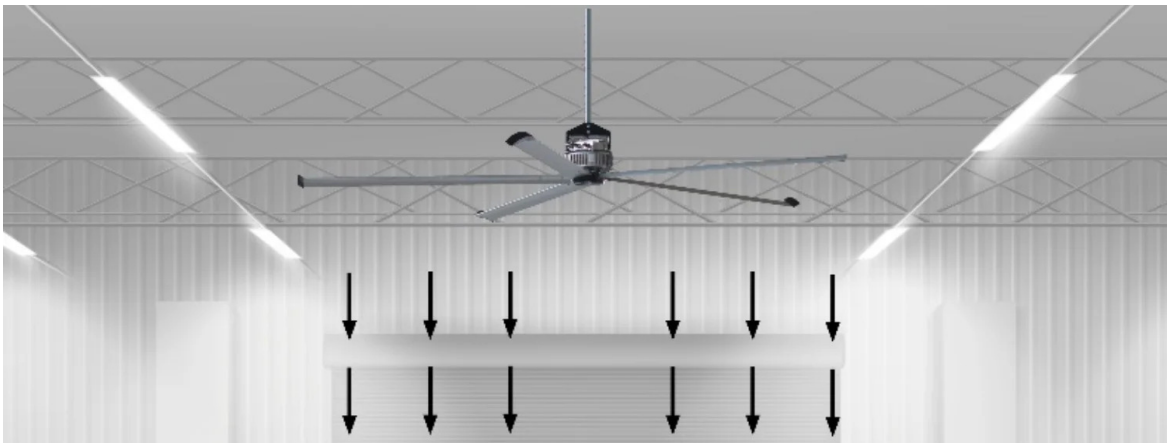

Secureair
Via Stroppiana, 15 - 10071 Borgaro torinese (Torino) Italy
Tel. +39 011 4502031 – Fax +39 011 47 03 927 - info@secureair.it - www.secureair.it

## Dimensions

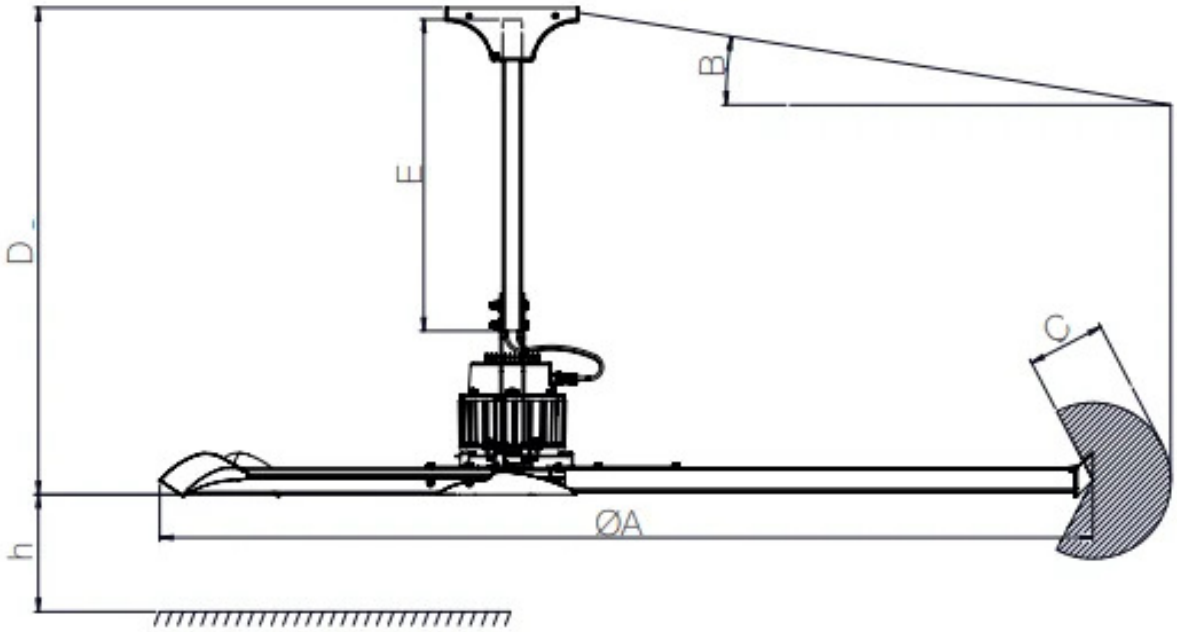


| Code | A mm | B mm | C mm | D mm | E mm | h mm |
|---|---|---|---|---|---|---|
| SLHS24000000000 | 2400 | 20 | 350 | 1250 | 800 | 2700 |
| SLHS30000000000 | 3000 | 20 | 350 | 1250 | 800 | 2700 |
| SLHS36000000000 | 3600 | 20 | 350 | 1250 | 800 | 2700 |



MADE IN ITALY

Secureair
Via Stroppiana, 15 - 10071 Borgaro torinese (Torino) Italy
Tel. +39 011 4502031 – Fax +39 011 47 03 927 - info@secureair.it - www.secureair.it

# Technical Data

| Code | Diameter mm | Power kW | Power W | Nominal flow rate m3 / h | Weight kg | Power supply Hz | Motor | RPM rpm |
|---|---|---|---|---|---|---|---|---|
| SLHS24000000000 | 2400 | 0.7 | 700 | 93256 | 62 | 50/60 | Three-phase | 200 |
| SLHS30000000000 | 3000 | 0,45 | 450 | 113921 | 64 | 50/60 | Three-phase | 130 |
| SLHS36000000000 | 3600 | 0,38 | 380 | 134271 | 67 | 50/60 | Three-phase | 110 |



MADE IN ITALY

Secureair
Via Stroppiana, 15 - 10071 Borgaro torinese (Torino) Italy
Tel. +39 011 4502031 – Fax +39 011 47 03 927 - info@secureair.it - www.secureair.it

# Photogallery

MADE IN ITALY

## Related Products

### HVLS industrial 5-blade ceiling fan APBG5S

SWHS00000000000

HVLS Industrial 5-Blade Ceiling Fan APBG5S

- 5 Blades Extruded Aluminum Shaped Profile
- Narrow Cone Air Distribution
- Three-phase Brushless EC motor equipped with Integrated Electronic System and EMC filters 3
- Sizes with Diameters 4m / 5m / 6m
- Air Flow Rates up to 529,464 m3/h (AMCA230-99)
- 120 RPM Max
- Pot. Max Ass. 1.4 kW
- Suitable for continuous duty S1

### HVLS industrial 5-blade ceiling fan APBG5

SMHS00000000000

APBG5 5-Blade Industrial Ceiling Fan

- 5 Blades Extruded Aluminum Anodized Against Corrosion Constant Section
- Increased Air Distribution Cone
- Three-phase Brushless EC motor equipped with Integrated Electronic System and EMC filters
- 3 Sizes with Diameters 3.6m / 5.4m / 7.3m
- Air Flow Rates up to 438,818 m3/h (AMCA230-99)
- 110 RPM Max
- Pot. Max Ass. 0.75 kW



MADE IN ITALY